CORDIVARI®

VOLANO CUBE®

PATENTED



PATENTED WALL MOUNTED HYDRAULIC SEPARATOR BUFFER TANK FOR HEAT PUMPS

CORDIVARI®

VOLANO CUBE®



PATENTED

BUFFER TANK AND HYDRAULIC SEPARATOR

Innovation and compactness in a single solution.
VOLANO CUBE is the brand-new compact wall-mounted solution for heat pumps, usable as a thermal buffer tank or hydraulic separator, suitable for outdoor installations and capable of providing perfect stratification and protection from condensation.
The hydraulic separation function has been designed for disconnecting and making the flow rates of the primary and the secondary circuits independent, preventing them from interfering with each other.
The thermal buffer tank function reduces the start-ups of the heat pump and provides a thermal energy reserve for the system (e.g., for defrosting efficiency).

VOLANO CUBE is designed for wall-mounted installation. Made of mild steel, with an external sheet metal, protected by an anti-corrosion treatment that makes it perfect for outdoor installations.
Wall mounting is made simple, easy, and stable thanks to the special bracket provided that supports and locks it in place.

Available in two models: 50 and 80 lt.

SOLVES THE CONDENSATION PROBLEM

In summer, when the heat pump works in cooling mode, the thermal insulation of the VOLANO CUBE, made of hard polyurethane foam, prevents air from coming into contact with cold surfaces, ensuring absolute protection from condensation problems.

PERFECT THERMAL STRATIFICATION

The patented design of the Volano Cube ensures perfect thermal stratification of the internal fluid, with great advantages in terms of system efficiency and versatility of configuration and use. The 8 side hydraulic connections allow the simultaneous use of two generators (e.g., heat pump and boiler) and two types of terminals (high and low temperature). The 4 service connections provide maximum flexibility for installing the necessary safety and control instrumentation.

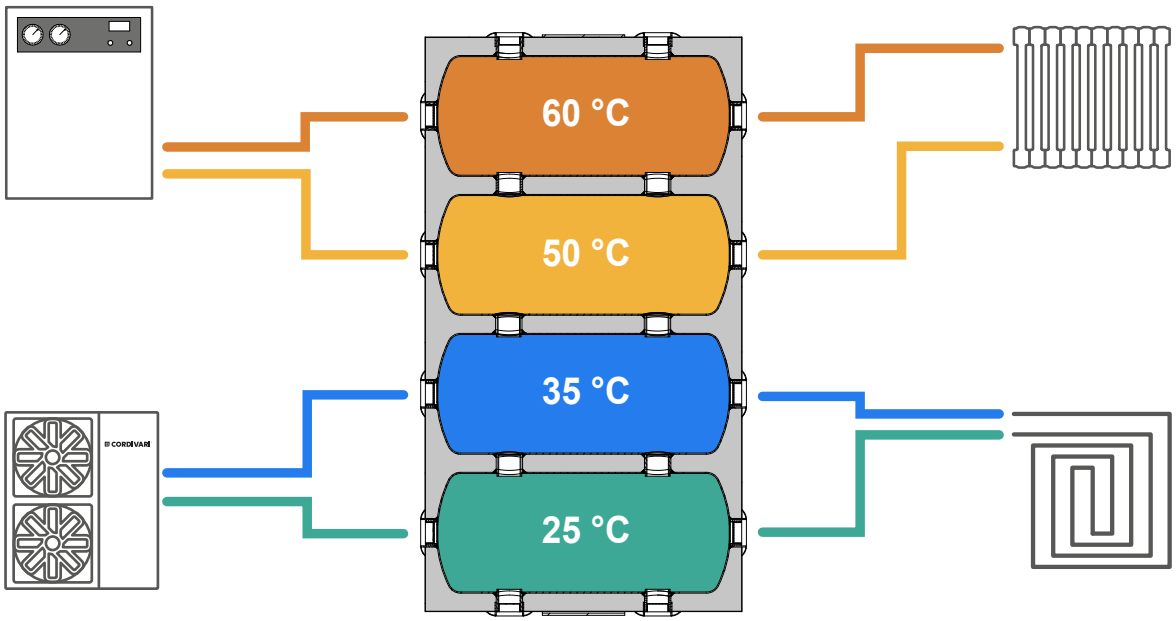

PATENTED



CORDIVARI®
VOLANO CUBE®



Model	VOLANO TERMICO CUBE H [mm]	L [mm]	P [mm]	Tmin / Tmax [°C]	Connections	Energy efficiency class
50	940	528	252	-10/95	1''1/4 (DN 32)	**B**
80	1070	593	278			**C**

PRESSURE	TEMPERATURE
Pmax	Tmin/Tmax
6 bar	-10 / +95 °C

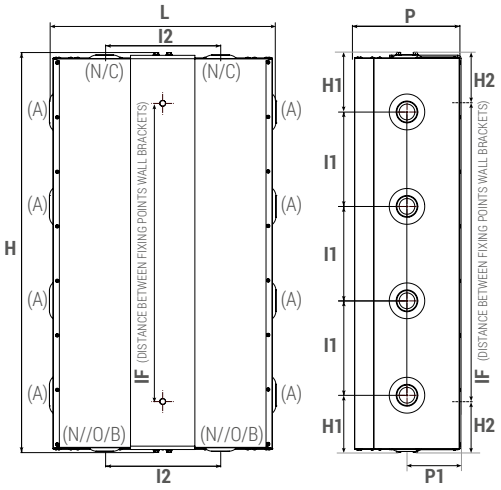

A	Connection to the system
N	Instrumentation
O	Drain
B	Safety valve
C	Vent valve

Modello	Volume [lt]	H	L	P	H1	H2	I1	I2	P1	IF [mm]	A Connections	N/O/B/C F
50	52	940	528	252	140	120	222	270	128	700	1''1/4	1''
80	80	1070	593	278	154	185	253	270	141	700	1''1/4	1''1/4

INTEGRATION WITH BOOST HEATER

Thanks to the patented design of the Volano Cube, it is possible to efficiently use an electric Boost heater that, if necessary, under particular operating conditions, facilitates the commissioning or reset of the primary circuit of the system.

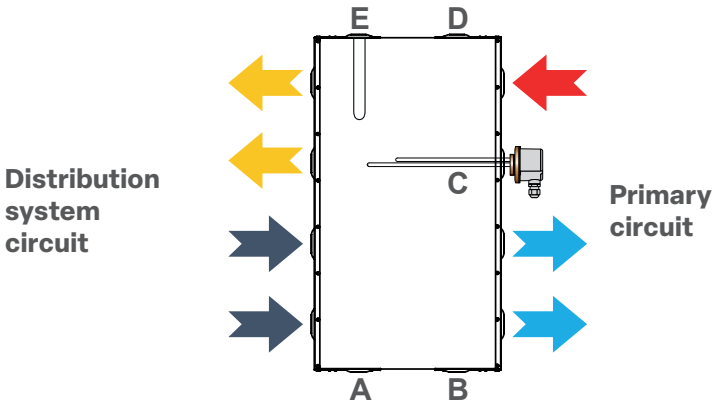

A	Drain
B	Dirt Separator/Safety valve
C	Optional electric heater
D	Vent
E	Socket electric resistance control probe

CORDIVARI®
VOLANO CUBE®



PATENTED

PRESSURE LOSSES

The following diagrams show the pressure losses of the Volano Cube 50 and 80, in relation to the flow and return connection scheme to the system.

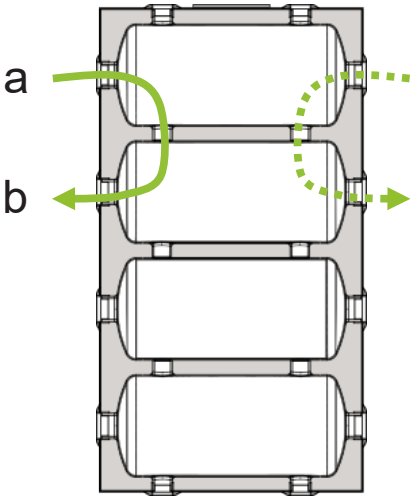

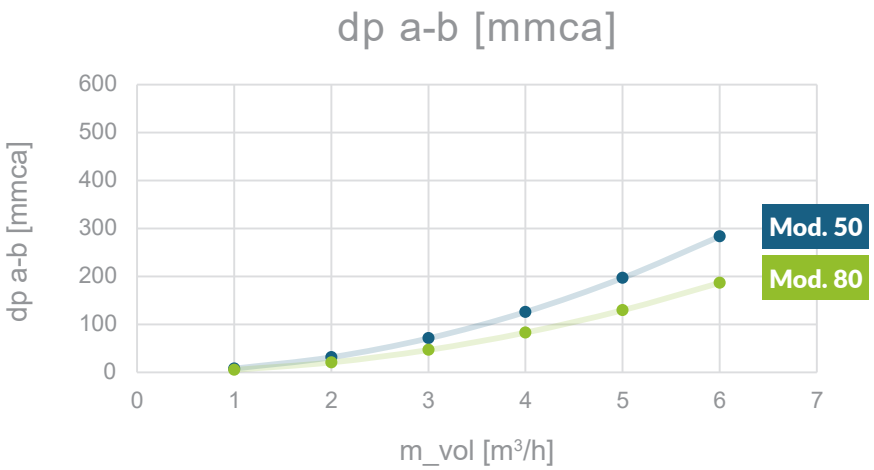

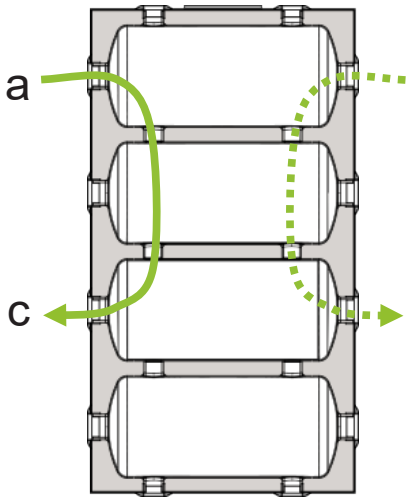

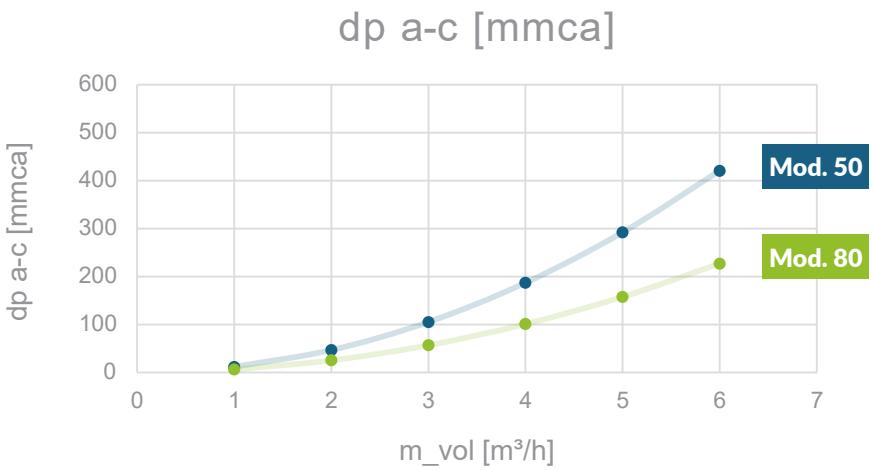

PATENTED



CORDIVARI®
VOLANO CUBE®

EXAMPLE OF SCHEME WITH BOOST ELECTRIC HEATER

The diagram below shows an example of a system with a heat pump generator and low-temperature terminals such as a radiant system or fan-coil. In this configuration, a boost electric heater has been inserted to support the primary circuit under certain conditions.

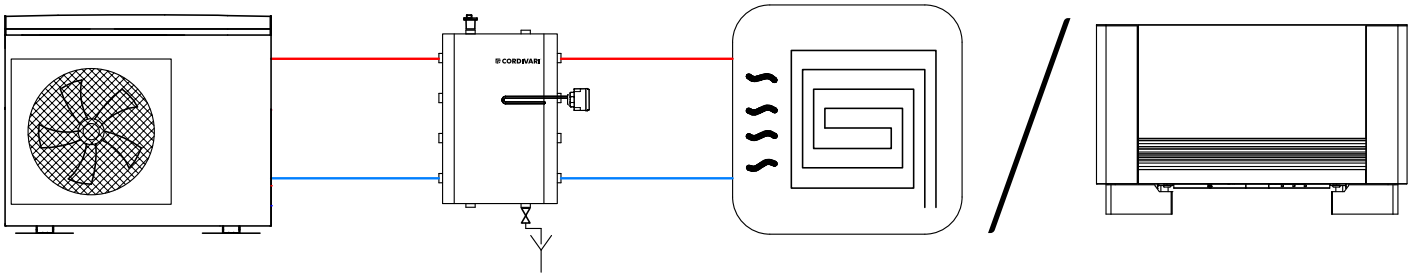

EXAMPLE OF HIGH/LOW TEMPERATURE SCHEME

The diagram below shows an example of a system with a double thermal generator: heat pump and condensing boiler. Thanks to the great thermal stratification capacity and the presence of 8 connections, it is possible to structure the system with two temperature zones, high and low. This solution is very flexible and ideal for renovations, useful for using different terminals in the same circuit such as radiators and fan coils for year-round building climate control.

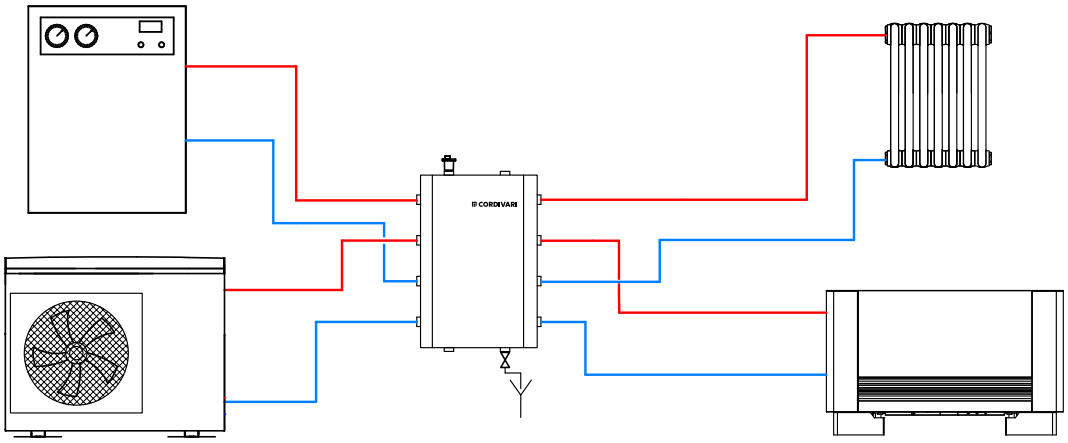

CORDIVARI®

VOLANO CUBE®



PATENTED

COMPLETE EXAMPLE OF HOT/COLD SYSTEM

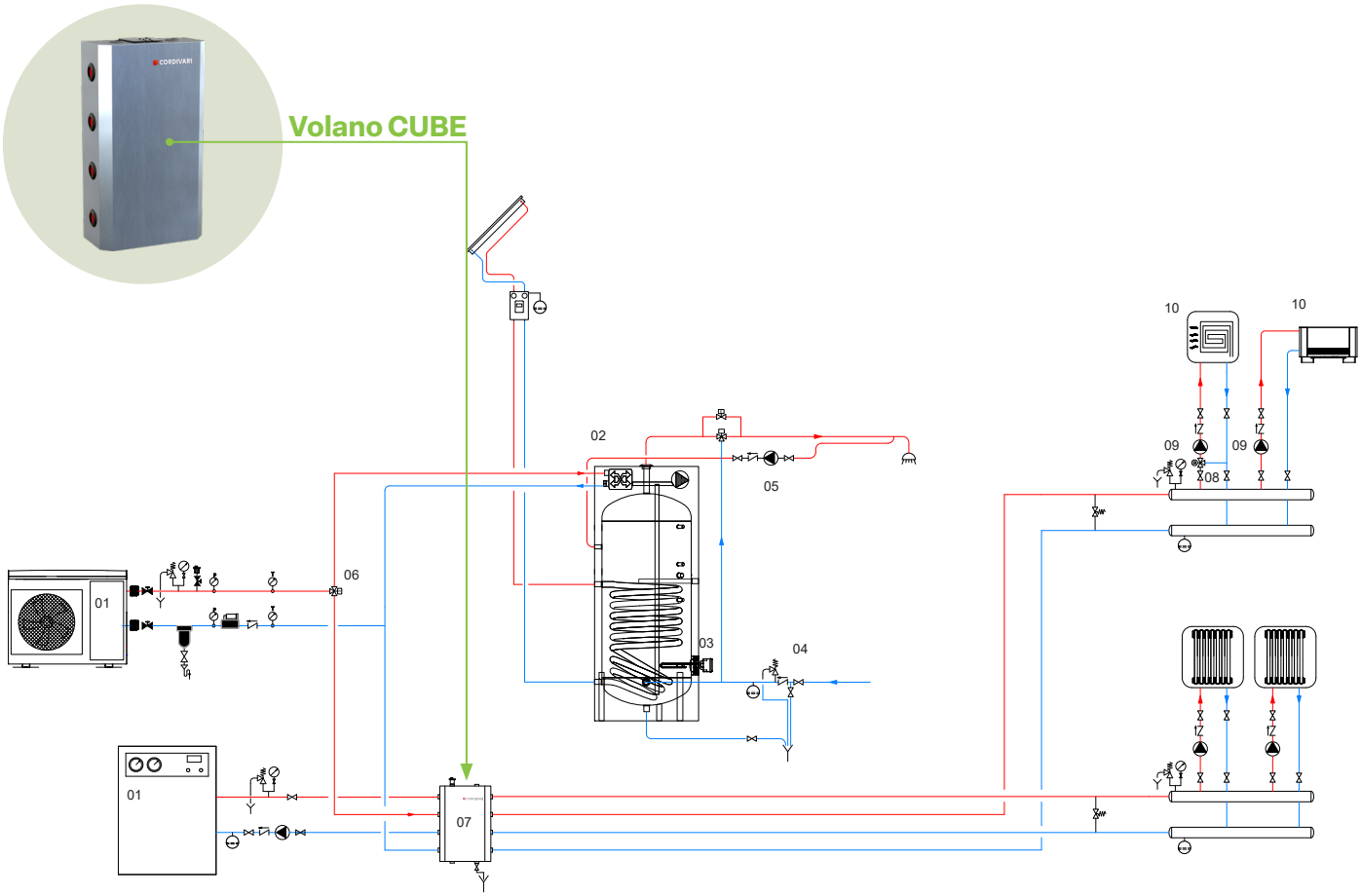

01	Thermal generator	**04**	Hydraulic safety group	**07**	**VOLANO CUBE**	**10**	Terminals
02	Bolly® 2 PDC calorifier	**05**	DHW recirculation pump	**08**	Thermostatic mixing valve		
03	Electric heater	**06**	Motorized three-way valve	**09**	Climate control system pump		

SPECIFICATION

Wall-mounted Volano Cube made of mild steel, external coating in sheet metal protected by an anti-corrosion treatment. Insulation in hard polyurethane foam with high thermal insulation λ=0.023 W/mK. The Volano Cube has a parallelepiped geometry with 4 F 1”1/4 gas connections on each long side and 2 F 1” (50 l), 1” 1/4 (80 l) gas connections on each short side. Capacity 50 liters: heat waste 40 W, Kboll= 0.89 W/K, Energy efficiency class B. Capacity 80 litres: heat waste 52 W, Kboll= 1.15 W/K, Energy efficiency class C. Maximum working pressure 6 bar, Minimum working temperature -10°C, Maximum working temperature 95°C.

11/2024 EN

PATENTED



CORDIVARI®
VOLANO CUBE®

CORDIVARI®

VOLANO CUBE

CORDIVARI SRL
Zona Ind. Pagliare 64020 Morro D'Oro (TE) Italy · cordivari.com · Tel. +39 085 80401 Fax +39 085 8040273
C.F.-P.IVA-VAT Id nr. IT00735570673 · REA TE Nr.92310 · Cap. Sociale € 10.000.000,00 i.v. · UNI EN ISO 9001 · 14001 · 45001